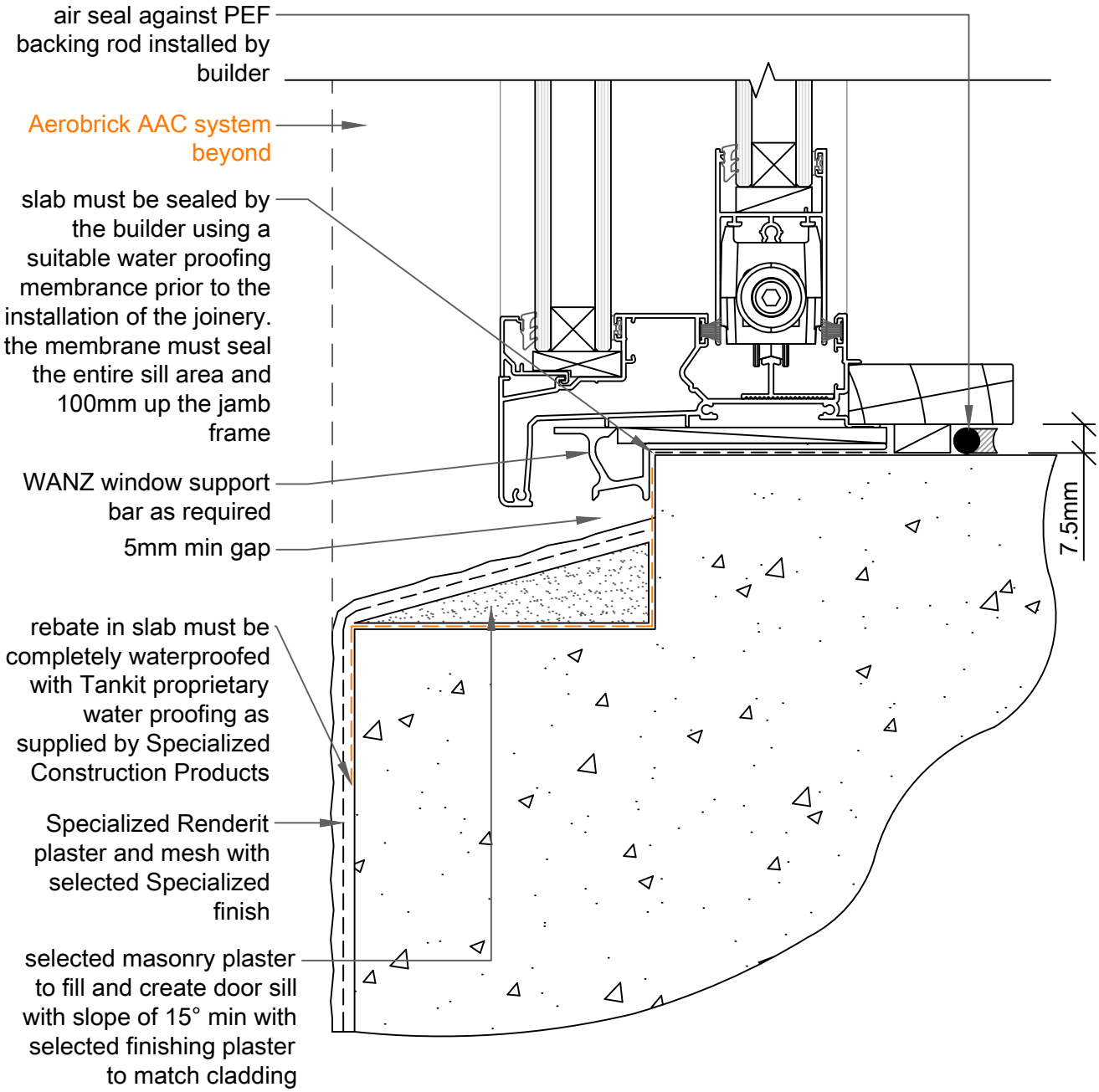

06F

SCALE: 1:2

Door Sill: REBATED CONCRETE SLAB

AEROBRICK AAC

© copyright 2015 Specialized Construction Products Ltd

All Dimensions to be site checked before construction & installation

13/02/2015

web www.specialized.co.nz